MOD. ML30 - G44-40

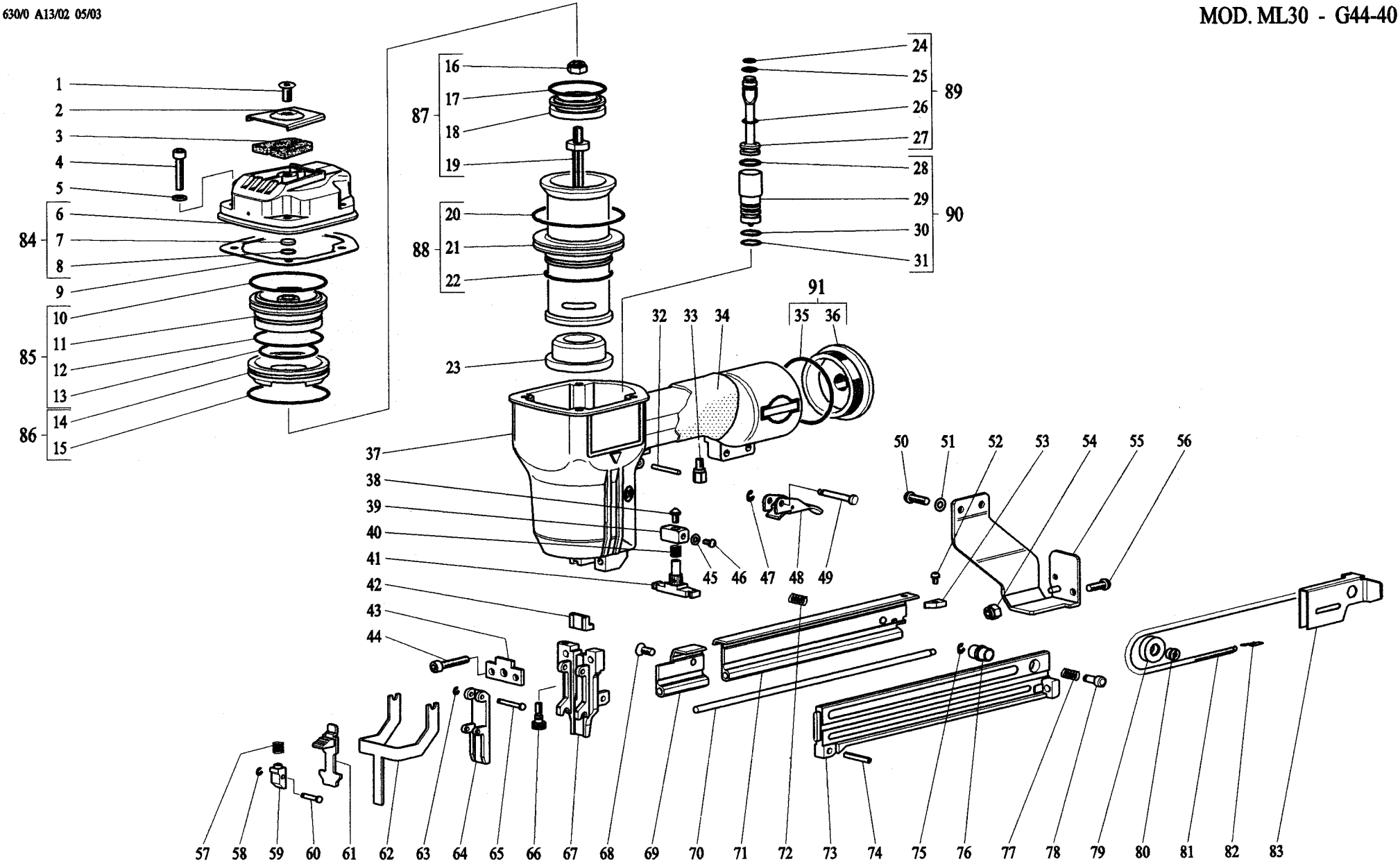

RIF.	COD.				
1	B000028A11	43	C630500A01	85	D430202A02
2	C430101A01	44	B000028C04	86	D430204A02
3	C430103A01	45	B000022A01	87	D630226A03
4	B000028C04	46	B000028E03	88	D630241A01
5	C450180A01	47	B000021C01	89	D430304A01
6	D430123A01	48	D450441A01	90	D630361A01
7	C225160A01	49	C620424A01	91	D430283A01
8	B000020A04	50	B000028E14		
9	C430181A01	51	B000022A02		
10	B000020A58	52	B000028E02		
11	D430202A02	53	C620768A01		
12	B000020A59	54	B000023B02		
13	B000020A24	55	D630707A01		
14	D430204A02	56	B000028E14		
15	B000020A71	57	C620697A01		
16	B000023B05	58	B000021C03		
17	B000020A61	59	C620699A01		
18	C430220A02	60	C620698A03		
19	C630225A03	61	C620684A01		
20	B000020A41	62	C630600A01		
21	D630241A01	63	B000021C03		
22	B000020A36	64	C620551A01		
23	C430244A01	65	C620524A01		
24	B000020B02	66	D620670A01		
25	B000020B01	67	C630540A03		
26	B000020A02	68	B000028A03		
27	D430304A01	69	C620822A01		
28	B000020A02	70	C620736A01		
29	D630361A01	71	D640735A01		
30	B000020A19	72	C430401A02		
31	B000020A19	73	C630937A11		
32	B000026A12	74	B000026A07		
33	C620408A01	75	B000021C01		
34	C425262A01	76	C620948A03		
35	B000020A58	77	C430401A02		
36	D430283A01	78	C620949A01		
37	C630261A01	79	C620820A01		
38	C620463A01	80	C620824A01		
39	C620464A01	81	C620842A01		
40	C450663A01	82	C620884A01		
41	D630484A01	83	C620860A03		
42	C620503A03	84	D430123A01		

	DATI TECNICI	POTENZA ACUSTICA	VIBRAZIONI PRODOTTE
Codice **A630000A13**	Peso: **1420 gr.**	DIRETTIVA 89/392 CEE	DIRETTIVA 89/392 CEE
Modello **ML30**	Dimensioni: **65-224-273 mm.**	prEN 12549 (1999)	ISO/FDIS 8662-11 (1999)
Tipo Punto **G44**	Consumo aria: **0,74 Nl/colpo (6 bar)**	UNI EN ISO 3744 (1997)	ah.w.3s= **inferiore a 2,5 (m/s²)**
Lungh. min. **20 mm.**	Pressione min.: **4,0 bar**	LwA= **84,6 (dB)**	
Lungh. max. **40 mm.**	Pressione max.: **7,0 bar**	LpA 60S 1M= **83,4 (dB)**	

	TECHNISCHE DATEN	SCHALLEISTUNG	GERAETEBEZOGENER VIBRATIONSWERT
Kode **A630000A13**	Gewicht: **1420 gr.**	EWG RICHTLINIE 89/392	EWG RICHTLINIE 89/392
Modell **ML30**	Abmessungen: **65-224-273 mm.**	prEN 12549 (1999)	ISO/FDIS 8662-11 (1999)
Klammer Typ **G44**	Luftverbrauch: **0,74 Nl/pro Schlag (6 bar)**	UNI EN ISO 3744 (1997)	ah.w.3s= **unter 2,5 (m/s²)**
Min. Länge **20 mm.**	Min.Betriebsdruck: **4,0 bar**	LwA= **84,6 (dB)**	
Max. Länge **40 mm.**	Max.Betriebsdruck: **7,0 bar**	LpA 60S 1M= **83,4 (dB)**	

	TECHNICAL FEATURES	NOISE POWER	TOOL RELATED VIBRATION VALUE
Code **A630000A13**	Weight: **1420 gr.**	EEC DIRECTIVE 89/392	EEC DIRECTIVE 89/392
Model **ML30**	Dimensions: **65-224-273 mm.**	prEN 12549 (1999)	ISO/FDIS 8662-11 (1999)
Staple type **G44**	Air consumption: **0,74 Nl/shot (6 bar)**	UNI EN ISO 3744 (1997)	ah.w.3s= **below 2,5 (m/s²)**
Min. length **20 mm.**	Min.working pressure: **4,0 bar**	LwA= **84,6 (dB)**	
Max. length **40 mm.**	Max.working pressure: **7,0 bar**	LpA 60S 1M= **83,4 (dB)**	

	DONNEES TECHNIQUES	PUISSANCE ACOUSTIQUE	VALEUR DES VIBRATIONS PAR LA MACHINE
Code **A630000A13**	Poids: **1420 gr.**	DIRECTIVE CEE 89/392	DIRECTIVE CEE 89/392
Modèle **ML30**	Dimensions: **65-224-273 mm.**	prEN 12549 (1999)	ISO/FDIS 8662-11 (1999)
Agrafe type **G44**	Consommation d'air: **0,74 Nl/coup (6 bar)**	UNI EN ISO 3744 (1997)	ah.w.3s= **inférieur á 2,5 (m/s²)**
Longueur min. **20 mm.**	Pression de fonction min.: **4,0 bar**	LwA= **84,6 (dB)**	
Longueur max. **40 mm.**	Pression de fonction max.: **7,0 bar**	LpA 60S 1M= **83,4 (dB)**	

	DATOS TECNICOS	POTENCIA ACUSTICA	VIBRACION PRODUCIDA
Código **A630000A13**	Peso: **1420 gr.**	NORMATIVA 89/392 CEE	NORMATIVA 89/392 CEE
Modelo **ML30**	Dimensiones: **65-224-273 mm.**	prEN 12549 (1999)	ISO/FDIS 8662-11 (1999)
Grapa tipo **G44**	Consumo de aire: **0,74 Nl/disparo (6 bar)**	UNI EN ISO 3744 (1997)	ah.w.3s= **inferior a 2,5 (m/s²)**
Largueza min. **20 mm.**	Presion min.: **4,0 bar**	LwA= **84,6 (dB)**	
Largueza max. **40 mm.**	Presion max.: **7,0 bar**	LpA 60S 1M= **83,4 (dB)**	

	CARACTERISTICAS TECNICAS	POTENCIA ACUSTICA	NIVEL DE VIBRAÇAO DO PRODUTO
Codigo **A630000A13**	Peso: **1420 gr.**	DIRECTIVA 89/392 CEE	DIRECTIVA 89/392 CEE
Modelo **ML30**	Dimensões: **65-224-273 mm.**	prEN 12549 (1999)	ISO/FDIS 8662-11 (1999)
Tipo de agrafe **G44**	Consumo de ar: **0,74 Nl/disparo (6 bar)**	UNI EN ISO 3744 (1997)	ah.w.3s= **inferior a 2,5 (m/s²)**
Largura min. **20 mm.**	Pressão min.: **4,0 bar**	LwA= **84,6 (dB)**	
Largura max. **40 mm.**	Pressão max.: **7,0 bar**	LpA 60S 1M= **83,4 (dB)**	

B630040A01 O-Ring Kit **630/0 A13/02 05/03**